ILIFE-V3s Max

Robotic vacuum cleaner

User Manual

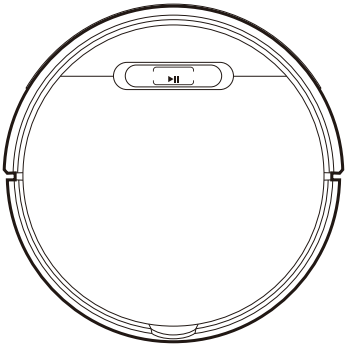

English

Français

Español

For more detailed information,
please visit: www.iliferobot.com

ILIFE

Dear Customer,

Thank you for purchasing ILIFE V3s Max robotic vacuum cleaner!
You've joined the millions of people who clean with robots - the smarter way to get it done.

Please take a few moments to read this manual and get acquainted with your robot, to get the best performance from your robot. If you have any problems with your robot please do not hesitate to contact our customer service or visit our website at www.iliferobot.com for more information.
Stay connected with us on Facebook and twitter to enjoy these exclusive benefits:

- Get support tailored to your specific robot, including answers to questions, maintenance tips, video demos, live chat and more.
- Get product updates and other valuable information among the first to find out about new robots, exclusive discounts and special promotions.

Connect with us right now at
Facebook: facebook.com/iliferobotics
Twitter: twitter.com/ILIFEROBOTICS

Enjoy a thorough cleaning every day!
Best regards,
ILIFE Innovation

ILIFE Customer Service

1-800-631-9676 (Toll free for North America)
Mon-Fri: 8:00 am - 7:00 pm CST

service_us_ca@iliferobot.com

Table of Contents

Safety Instructions 3
Product Composition 5
List of accessories 5
Robot anatomy 6
Duster Component 7
Charging dock 7
Dustbin 8
Remote control 8
Product specifications 9
Product Operating 10
Attentions 10
Charging dock 12
Select cleaning modes 15
Schedule cleaning 17
How to use the dust bags 19
Water tank operation 20
APP Download 22
Maintenance 23
Clean up dustbin and filters 23
Cleaning of water tank components 24
Clean up the side brushes 25
Check side wheels 25
Other spare parts 25
Troubleshooting 27
Error codes 27

Safety Instructions

⚠ Warnings

1. This robot should not be used by children under 8 or people with mentally challenged, unless they are under supervision. Do not let children sit on the robot or use it as a toy.
2. Attend to the robot promptly if an error occurs during cleaning. Before using the robot, remove all power cords and small objects on the floor. Roll up carpet tassels and make sure curtains and table cloth are not in contact with the floor.
3. If there are hanging steps or stairs, please test if the robot can detect them before use. If not, please set up barriers to avoid falling down, and make sure that the barriers cause no harm to people.
4. Follow the instructions in this user manual. Use factory authorized or recommended accessories only.
5. Make sure the voltage of the charging dock is compatible with the voltage of power supply.
6. Use the robot indoor and in a home environment only. Do not use it outdoor, or in commercial or industrial spaces.
7. Use factory authorized adaptor and charging dock only. Do not use non-rechargeable battery. Refer to “Product Specifications” section for details about battery standards.
8. Do not soak the robot in water and do not rinse the robot under the faucet.
9. Do not clean the robot with dripping wet cloth.
10. Do not use the robot on floors with ponding water.
11. Do not use the robot near fire or fragile objects.
12. Do not use the robot under extreme temperatures below -5°C or above 40°C.
13. Do not make the cloth, humans hair, finger, or other parts of the body close to the open or the running mechanism of the robot.
13. Do not use the robot on floors with stones or paper to avoid being stuck.
15. Do not use the robot in areas with any flammables, such as gasoline, toner and so on. Or use the robot to clean any burning objects, like cigarettes, ashes or matches, or anything that may cause a fire.
16. Do not use damaged charging dock.
17. Do not lift up the robot or the charging dock by the power cord, and keep the power cords away from heat and avoid it being trapped around doors, sharp edges or corners.

Safety Instructions

18. Damaged power cords must be repaired by manufacturer's repair service or certified technicians.
19. Install dustbin and filters properly before using the robot.
20. Do not use the robot in rooms where babies are sleeping.
21. Do not use damaged power cords or charging dock to recharge the robot. Do not use the robot if it's damaged by falling down, or soaking in water.
22. Turn off the power switch if the robot will not be used for a long time.
23. Turn off the power switch before cleaning or maintaining the robot.
24. Unplug power cords from the charging dock before cleaning or maintaining the robot.
25. Remove battery before discarding the robot.
26. Robot and battery are to be disposed of according to local safety regulations.
27. Do not cremate the robot to avoid the explosion.
28. Follow the instructions in this user manual.
    Manufacturer is not responsible for any damages caused by improper use.

Product Composition

List of accessories

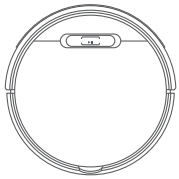

Main Body

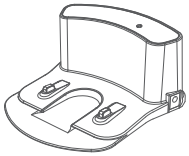

Charging Dock



Remote Control

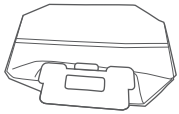

Dust Bag X3

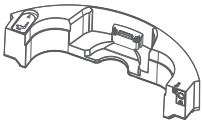

Water Tank

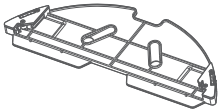

Duster Component



User Manual

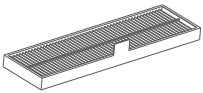

High Performance Filter



Mop Cloth

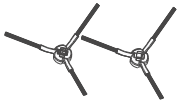

Extra Side Brush X2



Cleaning Tool



AAA Battery X2

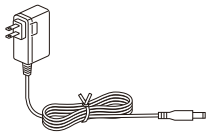

Power Adapter

Product Composition

Robot anatomy

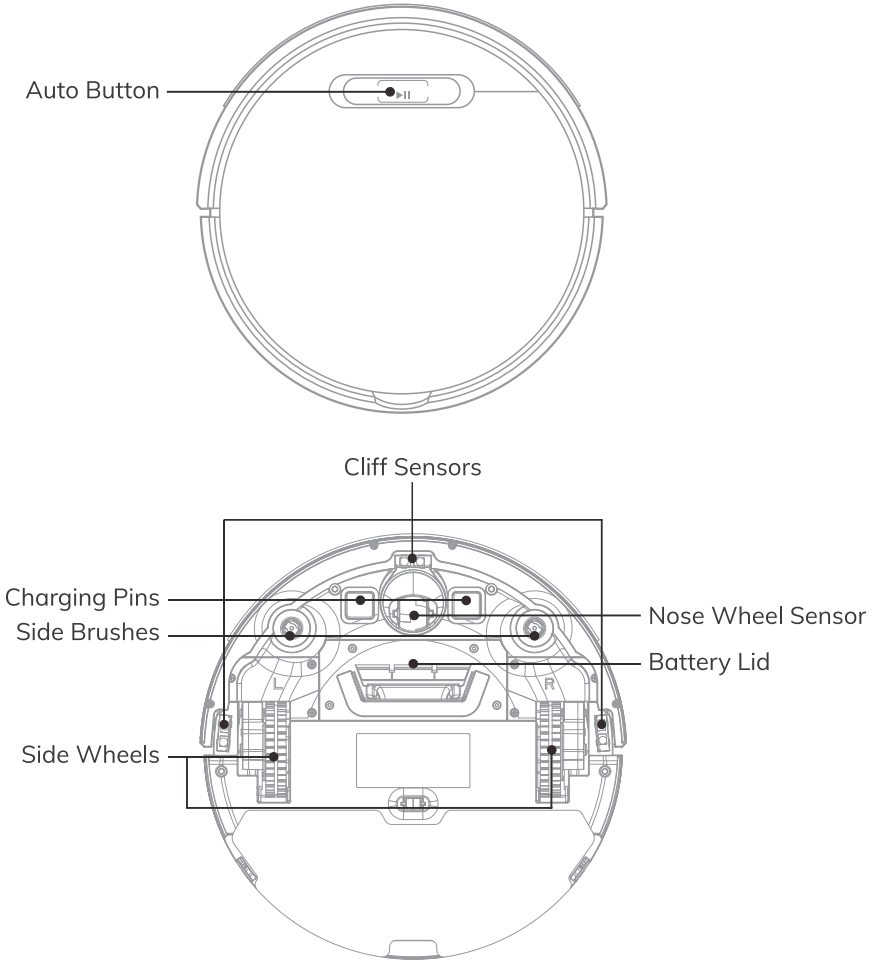

Product Composition

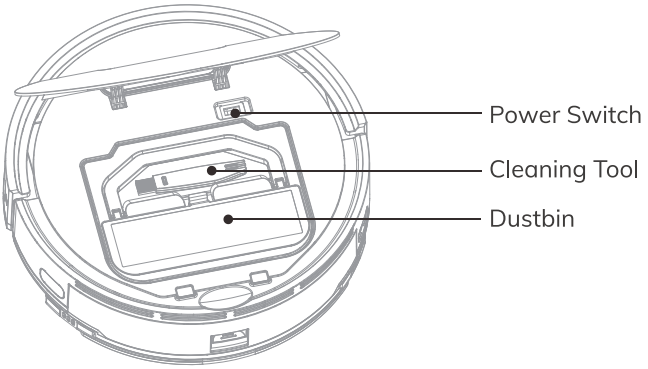

Duster Component

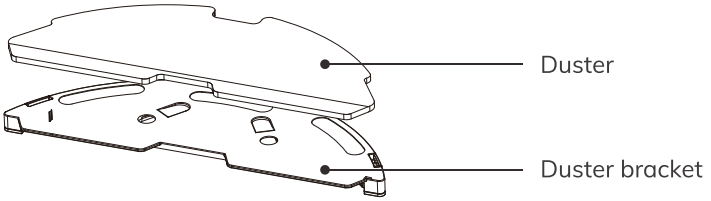

Charging Dock

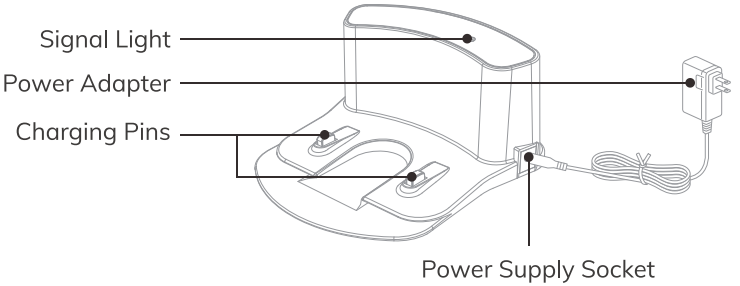

Product Composition

Dustbin

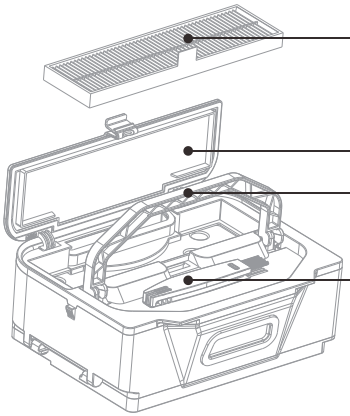

Remote control

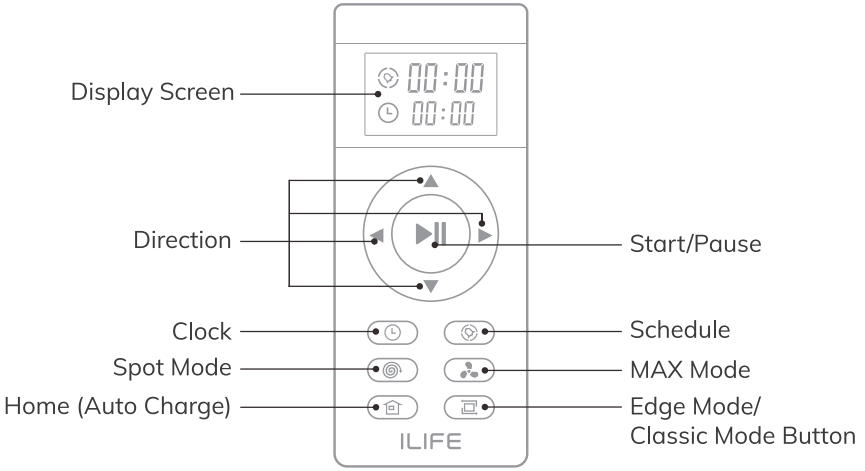

Product Composition

Product specifications

Item	Specification
Diameter	315mm
Height	76mm
Weight	2.3kg
Power	22W
Battery type	Li-ion
Charging type	Auto
Dustbin capacity	>0.6L
Water tank	0.2L
Cleaning mode	Path, Spot, MAX, Edge, Classic, Daily Schedule
Charging time	<360mins
Cleaning time	>90mins
Main body button type	Touch button

Note:
The company reserves the right of final decision on the interpretation of these terms and conditions.

Product Operation

Attentions

The robot may skip over some areas due to the complexity of the home environment. To achieve the best result, we suggest using it as daily routine and clearing up the obstructions on the floor before starting the robot.

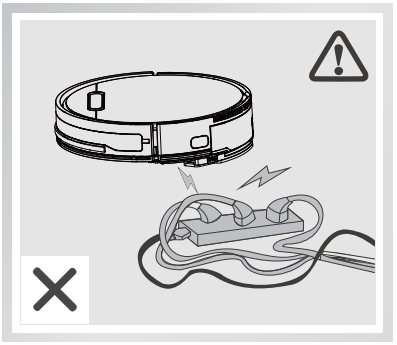

Please move away the power cords and other objects that may tangle the robot before cleaning.

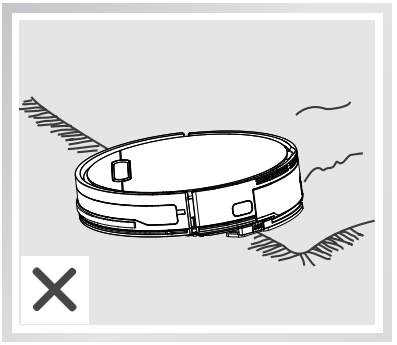

Please fold up the edges of the carpets before cleaning.

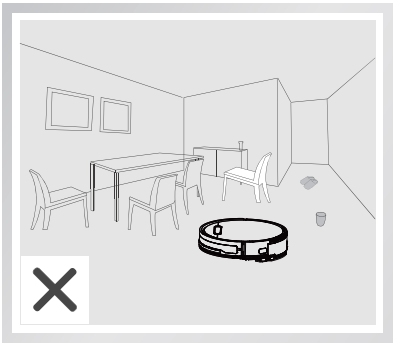

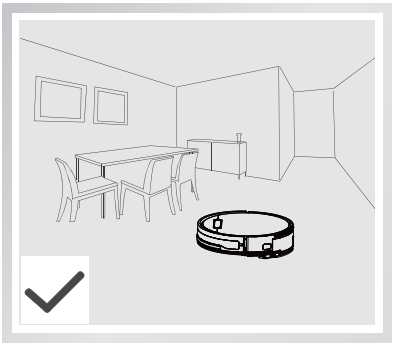

To avoid being stuck during cleaning, please arrange the furniture neatly.

Product Operation

Attentions

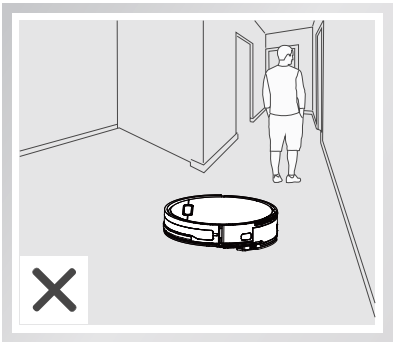

Please do not stand at somewhere with narrow space like the door sill or hallway in case of blocking the robot and skipping over some areas.

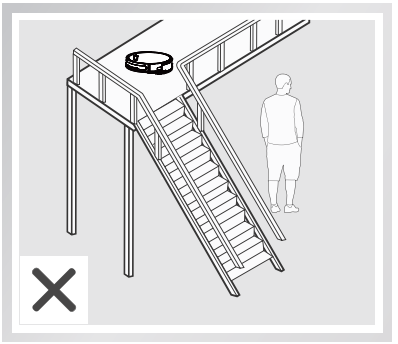

Please do not stand by downstairs when the robot is working upstairs in case of getting injured by any fallen objects.

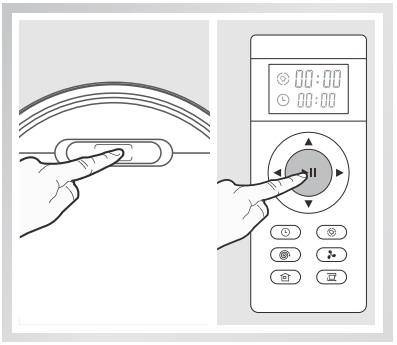

The robot will be in sleep mode if it stops working for 10mins. To restart it, please press the ▶II button or the ▶II button on remote control.

Product Operation

Charging dock

❶ How to charge

- Connect the adapter with the charging dock.
- Put the charging dock against the wall and ensure there is no objects within 1 meter on both sides and 2 meters forward, and no reflective objects around, such as mirrors.
- Connect the power.

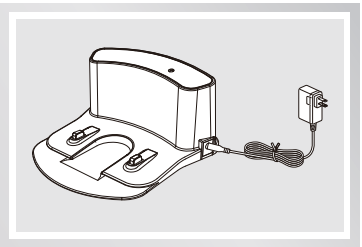

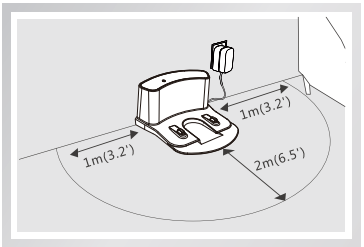

Note:
When the charging dock is connected to the adapter, the signal light of the dock will light up.

❷ Turn on / off

- Turn on the power button on the side, " I " for ON, " O " for OFF.

Note: After the robot finishes its work, please do not turn it off, and fully recharge it for the next run.

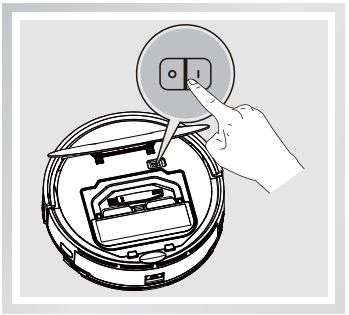

Product Operation

❸ Charging

- Charging automatically

1. Please place the robot on the charging dock.
2. If the ▶II button is flashing in orange, the robot is charging.
   The button will change to green when it is fully charged. Then the light off and the device goes into sleep mode.

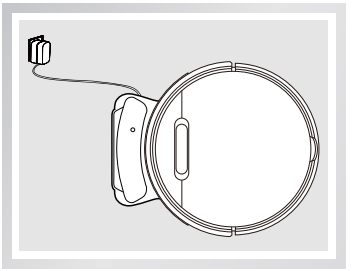

Note:

- Please leave the robot on the charging dock for daily use and make sure that the charging dock is connected to the power and the switch is on.
- If you won't use the robot for a long time, please fully charge it, turn off the power and keep it in a well-ventilated dry place.
- If the robot is scheduled for cleaning, please do not recharge it manually. Otherwise it will not perform properly.
- Please keep the charging pins clean in daily use to ensure a good connection.

❹ Start cleaning

Press the ▶II button on the robot or the ▶II button on the remote control, the ▶II button will turn to green and then the cleaning starts.

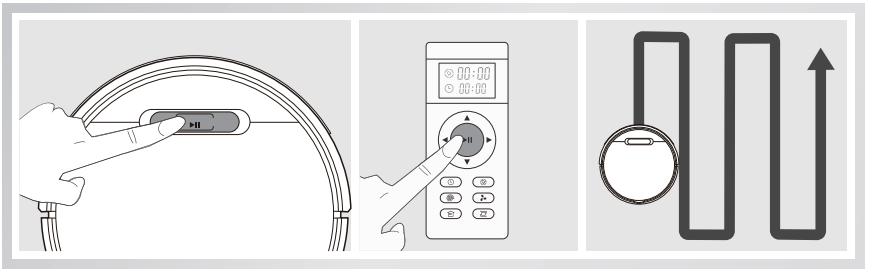

Product Operation

* Before cleaning, please make sure the button ▶II is in green. If the robot is in sleep mode, please press the button ▶II on the robot to awaken it.
* Please refer to the chapter of “Select cleaning modes” if you want to change the current cleaning mode.
* The robot will automatically work out the optimum cleaning path. If the robot is moved manually or by remote control when running, the robot will work out a new cleaning path, and some areas cleaned before will be cleaned again. To ensure the cleaning efficiency, please do not move it when running.
* The robot pauses shortly to work out the best cleaning path when running. Please do not be panic and wait for a moment. The times of it get paused depend on the complexity of the home environment.

5 Pause

Press the ▶II button on the robot or the ▶II button on the remote control to stop it from working.

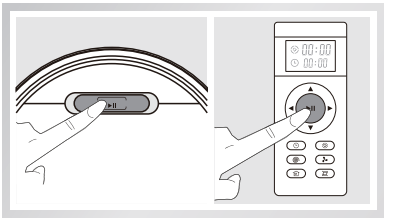

Note:
1. The robot will be in sleep mode if it stops working for 10mins. To restart it, please press the ▶II button or the ▶II button on remote control.
2. The robot will work out a new cleaning path, and will clean the areas again which have been cleaned before.

6 Sleep mode

- To enter the sleep mode:
  1. Press button ▶II for three seconds.
  2. The Robot will automatically enter the Sleep Mode if no action is taken for 10 minutes.

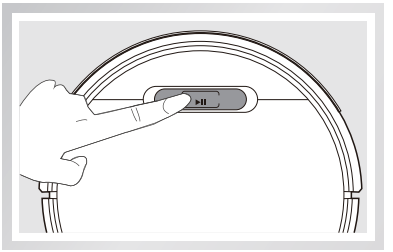

Product Operation

Select cleaning modes

For the best cleaning result on different floors, there are multiple cleaning modes available to satisfy different cleaning needs.

Note:
1. Please ensure that the robot is on standby, which means the button ⏯ should be in green. If the robot is in sleep mode, please press the button ⏯ on the robot or ⏯ on the remote control to awaken it.
2. When changing to other cleaning modes from auto mode, the robot will work out a new cleaning path, and the areas which are cleaned before will be cleaned again.

❶ Path mode

The default cleaning mode. The robot will clean in S-shaped path, and automatically recognize the missed areas and intelligently include them to new cleaning path.

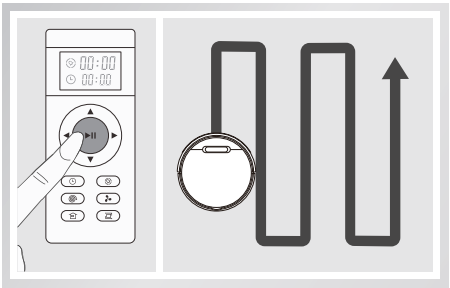

❷ Spot mode

Recommend for localized areas with heavy stains. Press ◎ button on the remote control to start Spot mode.

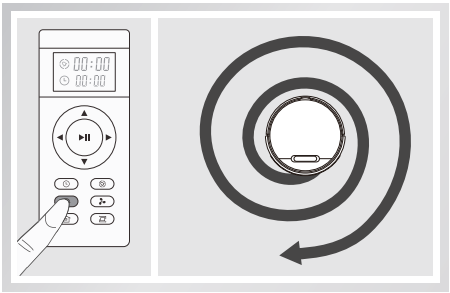

Product Operation

❸ Edge Mode/Classic Mode

- Edge Mode: Press the button once to enter edge cleaning when robot is in selected mode. (Refer to Figure 1)
- Classic Mode: Press the button twice to enter classic cleaning when robot is in selected mode. (Refer to Figure 2)

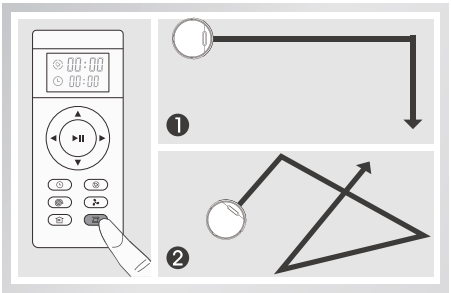

❹ MAX mode

It is suitable for the environment where the whole ground is dirty and with more dust. Press the (fan) button of the remote control to increase the suction of the robot. Press the (fan) button again to switch to normal suction.

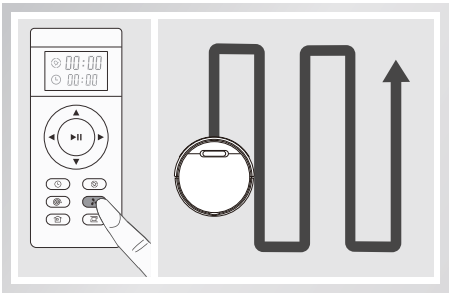

❺ Auto charge

The robot can sense lower power during the cleaning process and automatically activate Self-charge Mode and search for the charging dock.

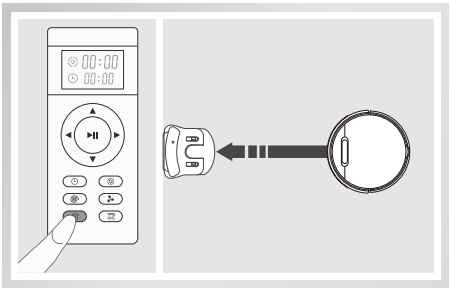

* You can also use the button (home) on the remote control to command the robot to activate the mode.

Product Operation

Schedule cleaning

To perform the best, the robot can be scheduled for cleaning. Local time and cleaning schedule can be set via remote control or ILIFE APP. Once schedule successfully, the robot will start cleaning at the same time everyday.

Before setting local time and cleaning schedules, make sure ⏯ button on the main body is switched on. A green flashing light indicates robot is activated from Sleep mode. To activate robot, tap ⏯ button on the main body or ⏯ button on the remote control.

❶ Set local time with remote control

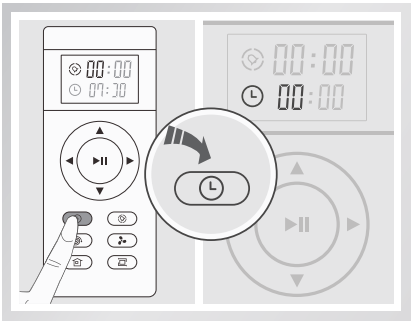

Tap 🕒 button. The icon of 🕒 and 00:00 on the screen will flash.

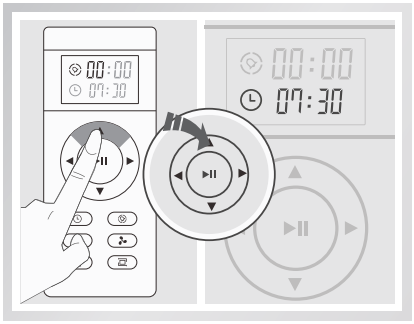

To set local time adjust time with " ▲ " " ▼ " button. To set local time press " ◀ " " ▶ " to change from hours to minute.

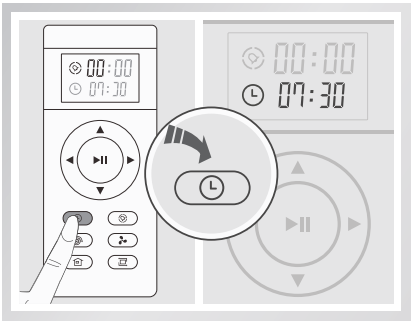

Press 🕒 again to save local time. Voice prompt will be heard if set up successfully.

Product Operation

❷ Schedule time to clean

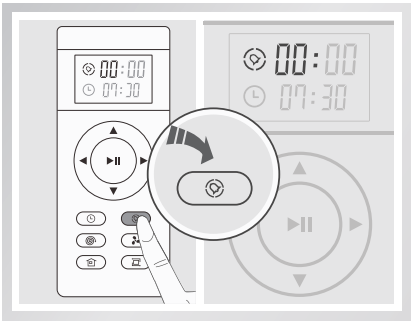

The icon of ⏲ and 00:00 on the screen will flash.

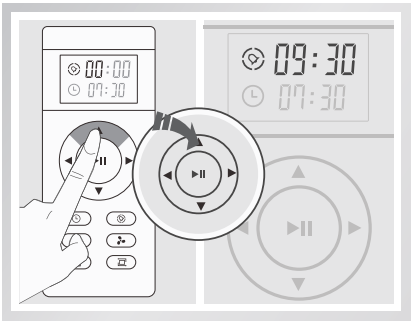

Use direction buttons to adjust schedule time.

Press ⏲ again to save the time for cleaning. Voice prompt will be heard if setup successfully, and the robot will start cleaning at the specific time everyday.

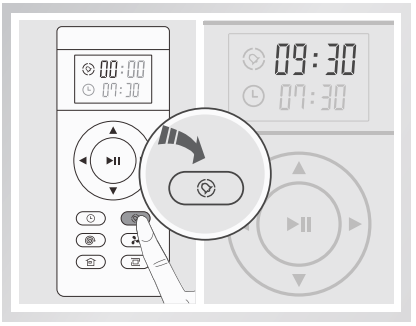

❸ Cancel a schedule

Press ⏲ , and adjust time to “00:00” and save, or turn off the power of the robot.

- Please pay attention to the prompt to see if the robot is successfully scheduled.
- Rescheduling is required after changing batteries in the remote control.

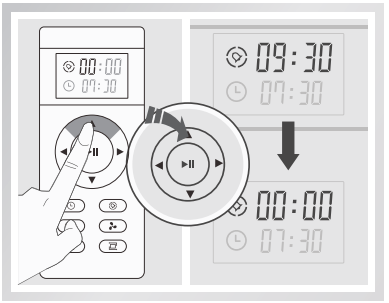

Product Operation

How to use the dust bags

This model equips with dust bags. Replace the dust bags before cleaning. These bags are throwaway and no need cleaning. (The dust bag replacing should base on the actual situation)

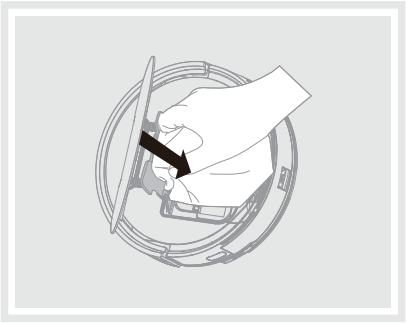

1. Please make sure to expose the hole of the cardboard and insert it into the slot.

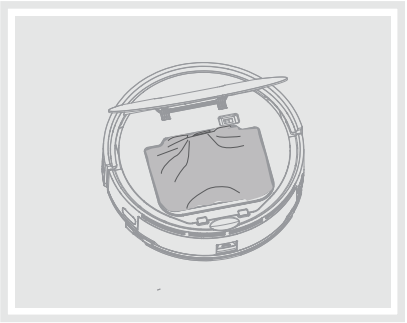

2. Place the dust bag neatly to make it fill up with the dust box.

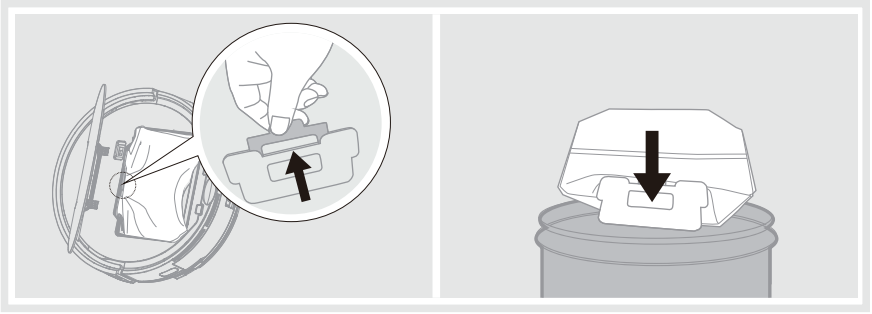

3. Lift the dust bag when finished cleaning and dispose of it in the trash bin.

Product Operation

Water tank operation

The water tank with a mopping cloth is installed into the device. Please kindly add water to the water tank before mopping. It is recommended to vacuum the floor before mopping. For daily maintenance, please check out the tips on the corresponding chapter in this manual.

Note:
1. Please do not use water tank components on the carpet .
2. Please pay attention during the mopping mode, timely add water or clean the mopping pad. The water tank needs to be removed when adding water.
3. Be sure to remove the water tank components when charging.

❶ Remove the water tank components

Slide back to remove the water tank components.

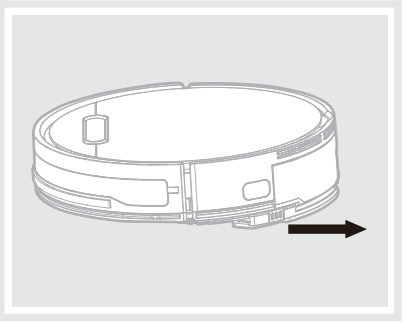

❷ Add water

Open the water injection cap and fill it with water. Tightly close the cap once finish water injecting.

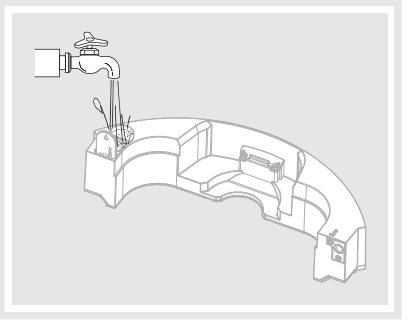

Product Operation

❸ Place the mop cloth

Insert the edge of the water tank into the slot of the mopping cloth, then make the mopping cloth adhere to the water tank with the self-adhesive hook and loop respectively attached.

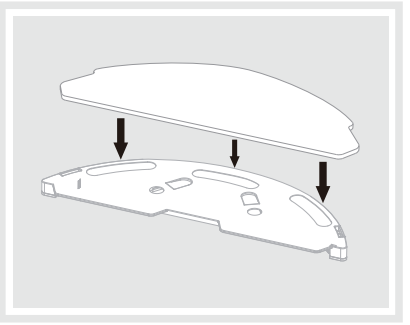

❹ Install water tank components

Slide it forward, align it with the clip, and when you hear a "click" sound, it is installed in place, and then you can press the sweep button to automatically execute the corresponding mopping mode.

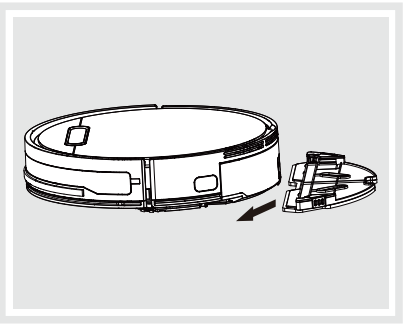

APP Download

Downloading the App

The robot can be controlled by the “ILIFEHOME” app. Scan the QR code to install the app on your iOS or Android device.

ILIFEHOME

ILIFEHOME

Maintenance

Clean up dustbin and filters

* Please turn off the robot before cleaning any spare parts, and remember to cut off the power.

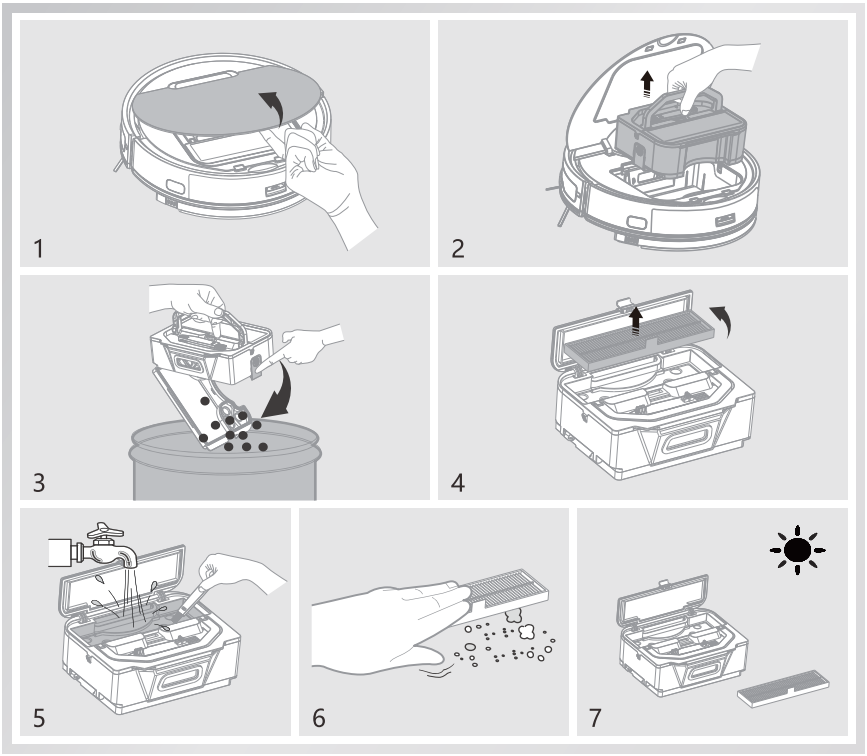

1. Open the cover, take out the dustbin and high-performance filter. Press the button on dustbin to release all dust.
2. Take out the high-performance filter. Slightly tap it to empty the dust in it. Rinse it with clean water and dry it in the air.

Note:
High Performance Filter can not be cleaned with water.

Maintenance

Cleaning of water tank components

❶ Clean the mop cloth

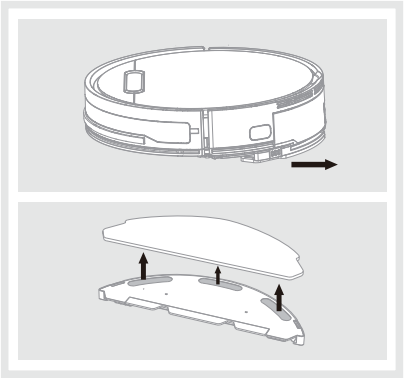

Remove: after mopping, please remove the water tank components and the mop cloth.

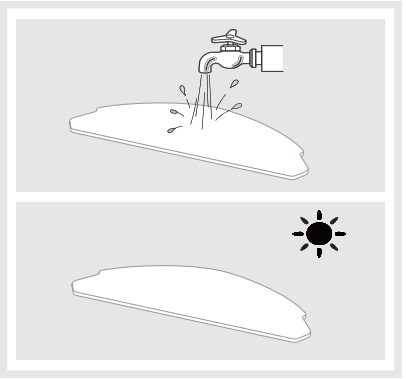

Maintenance: rinse and air dry the mop cloth.

❷ Clean the water tank

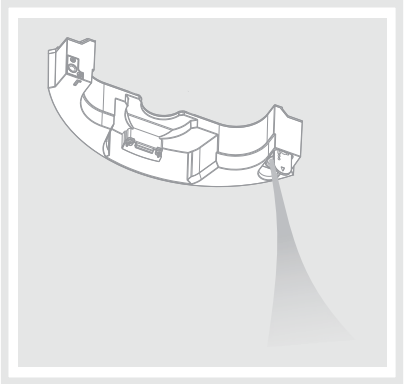

Remove: after mopping, remove the mop cloth and the components, drain the remaining water in the water tank.

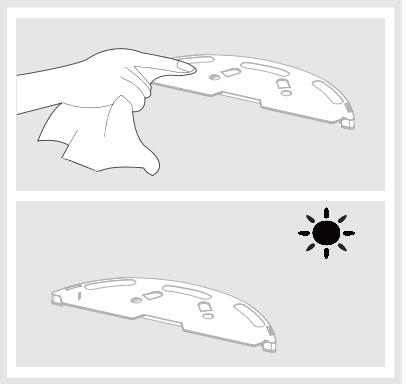

Maintenance: dry the water tank by hand and then air dry it.

Maintenance

Clean up the side brushes

- Remove side brushes. Wipe clean with a clean cloth.
- When replacing the side brush, please distinguish the corresponding installation position of the "L" "R" side brush.

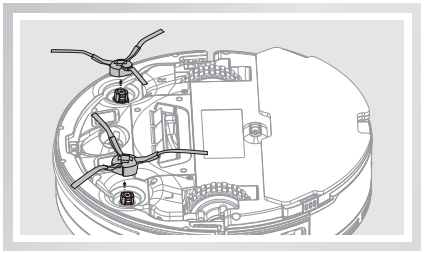

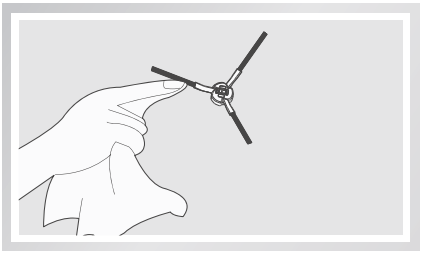

Check side wheels

When a buzzer sounds,
turn off the power, and then clear
any objects blocking the side wheels.

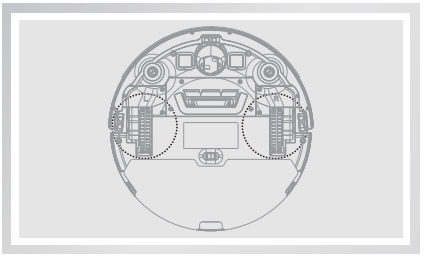

Other spare parts

Clean the nose wheel regularly to
avoid being tangled by hair.

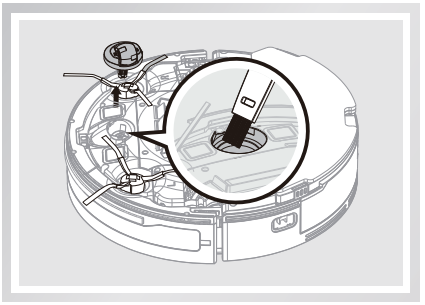

Maintenance

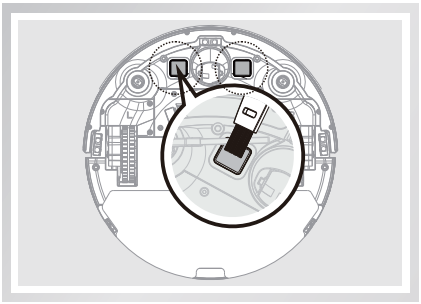

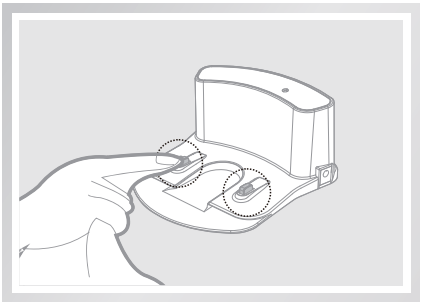

Clean the charging pins on the robot and the charging dock regularly with dry cloth.

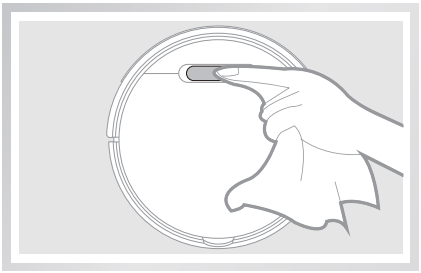

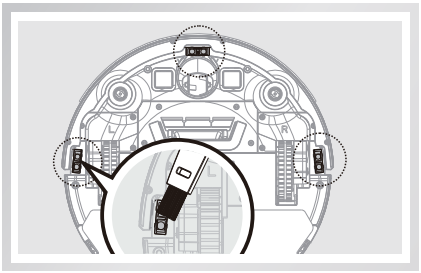

Periodically wipe the sensor with a dry cloth to keep it clean.

* When the battery is in the depth of discharge state or not in use for a long time, its capacity will be reduced. In this case, we suggest you to activate it again. Charge the robot on the charging dock for 3mins, and repeat 3 times, then fully charge the robot for 5-6hours.
* The robot uses long cyclic life batteries. There is no need to replace it frequently. Please contact our support team if necessary.

Troubleshooting

Error codes

The robot will remind you by beeping when it is malfunctioning.

• Short tones

NO.	Tone	Possible Cause	What to do
01	•	Wheels or side brushes problems.	Check wheels and side brushes.
02	• •	Cliff sensor or bumper sensor failure.	- Clean cliff sensor. - Gently shake the bumper to check if there's anything stuck in it.
03	• • •	Robot gets stuck.	Pick up robot and restart.
04	• • • •	Dustbin not installed.	Install the dustbin.